LYRAE™ XS SC

Difficult inground installations are made easier with the Lyrae XS SC. High light output comes from powerful LEDs and it can be used with a variety of optics, from narrow to wide, in addition to a bi-symmetrical option. The light source can be tilted 20° from the horizontal position, always ensuring accurate illumination of the selected surface. Additionally, Lyrae XS SC can be equipped with anti–skid glass featuring the highest standards of certification for anti–slip usage having no impact on the fixture's outstanding colour mixing.

KEY FEATURES

Lumen output & Light source
Luminaire with high-power LEDs provides light output with a high efficacy. Offering a choice of CCT options, precise beam control with no light spill, and perfectly homogenised light output, it's an excellent solution for applications requiring high performance in a compact luminaire.

Design & Durability
Lightweight, compact, durable and stylish housing made of high-pressure die cast aluminium. IP68 and IK10 certification. Supported with a 5 year warranty.

Flexibility
An exceptionally compact luminaire available with a wide LED choices, and beam angle options, Lyrae XS SC offers the lighting designer a flexible solution for the most demanding applications.

COLOURS

* UPON REQUEST

PW (3000 K)
TW *

CONTROL & PROTOCOLS

VIA E-BOX
E-BOX REMOTE

STANDARD & SPECIFICATION

IP68
IK10
CE
ETL US
ROHS
UK CA
5 YEAR — Warranty with Registration
Vibration Standard for Bridge

TRIM FINISH OPTIONS

Stainless Steel

COLOUR TEMPERATURE

* UPON REQUEST

2.200 K *
2.700 K *
3.000 K
4.000 K *
6.500 K *
2.200 K - 4.000K *
2.700 K - 6.500 K *

OPTIC OPTIONS

SYMMETRICAL

10°
15°
25°
30°
45°
65°

BI-SYMMETRICAL

10°X30°
10°X60°
15°X45°
30°X60°
30°X10°
60°X10°
45°X15°
60°X30°

TRIM OPTIONS

Flush trim Round
Bevel edge trim Round
Bevel edge trim Square

SPECIFICATION

ELECTRICAL	Typical Power Consumption	15 W +/-10 %	
	Input Voltage	48 V	
OPTICAL	Light Source	High Power Single Chip LED	
	Colour Variants	PW (3000 K)	
		Variants On Request (TW (2200 - 4000 K | 2700 - 6500 K) | 2200 K | 2700 K | 4000 K | 6500 K)	
	Beam Angle	Clear Glass	Symmetrical: 10° | 15° | 25° | 30° | 45° | 65°
			Bi-symmetrical: 10°x30° | 30°x10° | 10°x60° | 60°x10° | 15°x45° | 45°x15° | 30°x60° | 60°x30°
		Anti-Skid Glass	Symmetrical: 18° | 22° | 35° | 50° (preliminary)
			Bi-symmetrical: 20° x 35° | 35° x 20° | 20° x 65° | 65° x 20° | 20° x 50° | 20° x 50° | 35° x 65° | 65° x 35° (preliminary)
	Lumen Output Delivered	800 lm (@10° PW 3000 K) (preliminary)	
	Projected Lumen Maintenance	L90B10 >90.000 hrs, Ta = 25°C / 77°F	
CONTROL	Interface protocol	Via E-box Remote Range	
	E-Box Remote control protocol	USITT DMX512/RDM, ArtNet, MA Net, MA Net2, sACN, Kling-Net	
	Setting / adressing	E-box Remote range	
	Connectivity & Power Supply	E-Box Remote range	
PHYSICAL	Flange Diameter x Diameter x Height	Bevel Egde Trim: ø 150 x ø 175 x 180 mm (ø 5.9 x ø 6.9 x 7.1 in.)	
	Weight	1.2 kg | 2.65 lbs	
	Housing	High Pressure Die-Cast Aluminium Body | Stainless Flange | Tempered Glass (Clear or Anti-Skid)	
	Trim Options	Bevel Edge Trim | Flush Trim	
	Trim Shape	Round | Square	
	Trim Finish Options	Stainless steel	
	Cables / Connectivity	1m cable, bare end (custom length on request) | Junction Box	
	Mounting Method	External Mounting Sleeve	
	Adjustability	Tilt 0°- 20° (One Direction Tilt)	
	Protection Factor	IP68 / Suitable For Wet Locations (8h @ 1m)	
	IK Rating	IK10	
	Static Load Resistance	35 kN (TBC)	
	Cooling System	Convection	
	Operating Ambient Temperature	-20 °C / +40 °C (-4 °F / +104 °F)	
CERTIFICATION	Listings	ETL / cETL, CE, RoHS, UKCA	
ACCESSORIES	**Not Included Items**		
		Lyrae XS Mounting Sleeve	
		Trim for Lyrae XS (Stainless Steel, Round, Bevel Edge)	
		Trim for Lyrae XS (Stainless Steel, Round, Flush)	
		Trim for Lyrae XS (Stainless Steel, Square, Bevel Edge)	
		Junction Box Remote (1x Output)	
		Junction Box Remote (4x Output)	
		Re-enterable Electrical Insulating Resin	
DEMO SET		Lyrae XS Demo Set	Includes: Lyrae fixture, Mounting Sleeve, Trim, Set of Optical Foils (Not suitable for permanent instalations. IP2X.)

DIMENSIONS

with Round beveled Trim

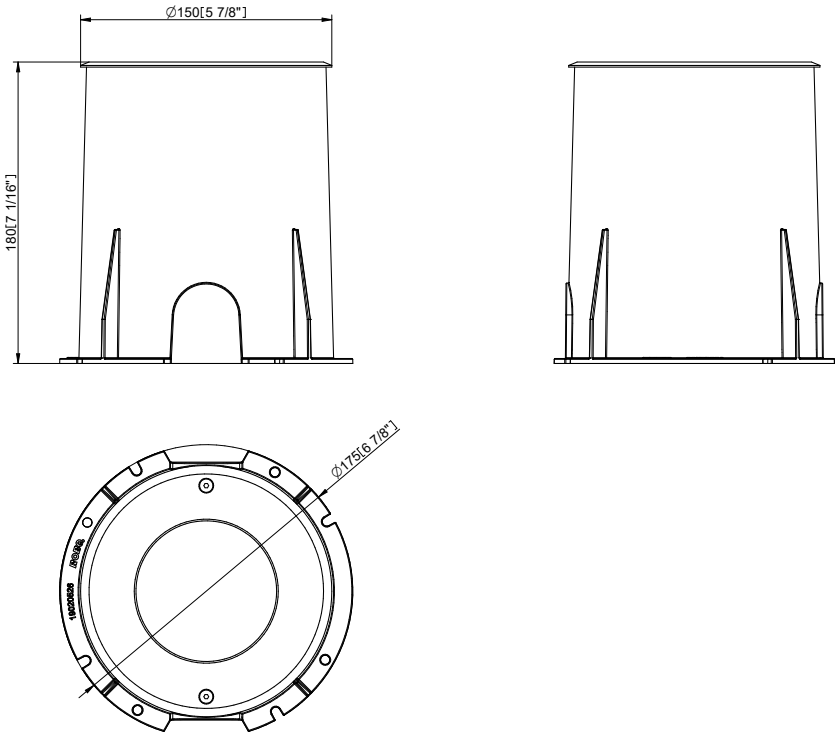

with Square beveled Trim

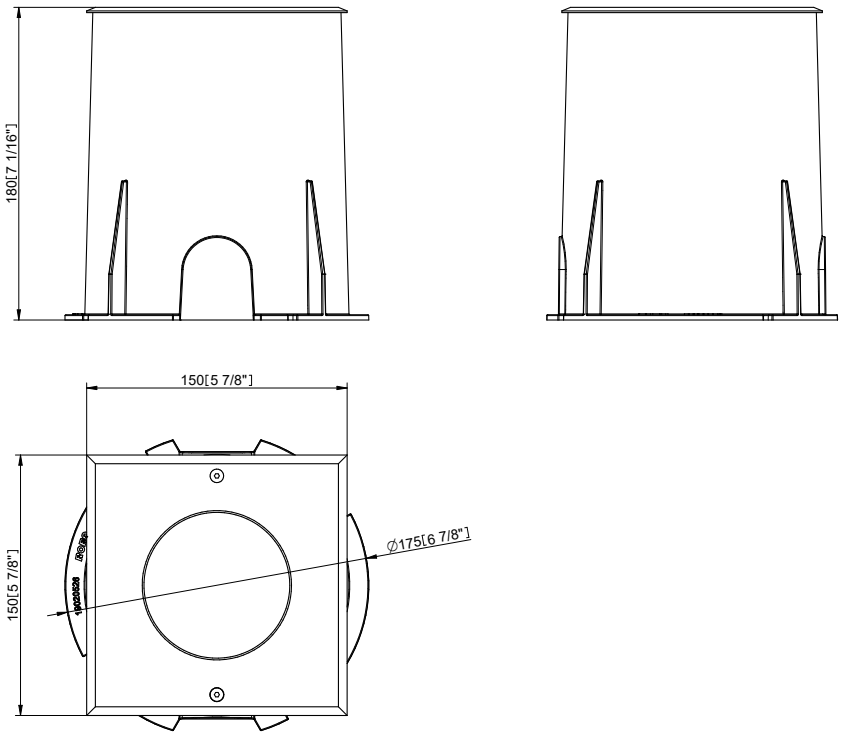

with Round flush Trim

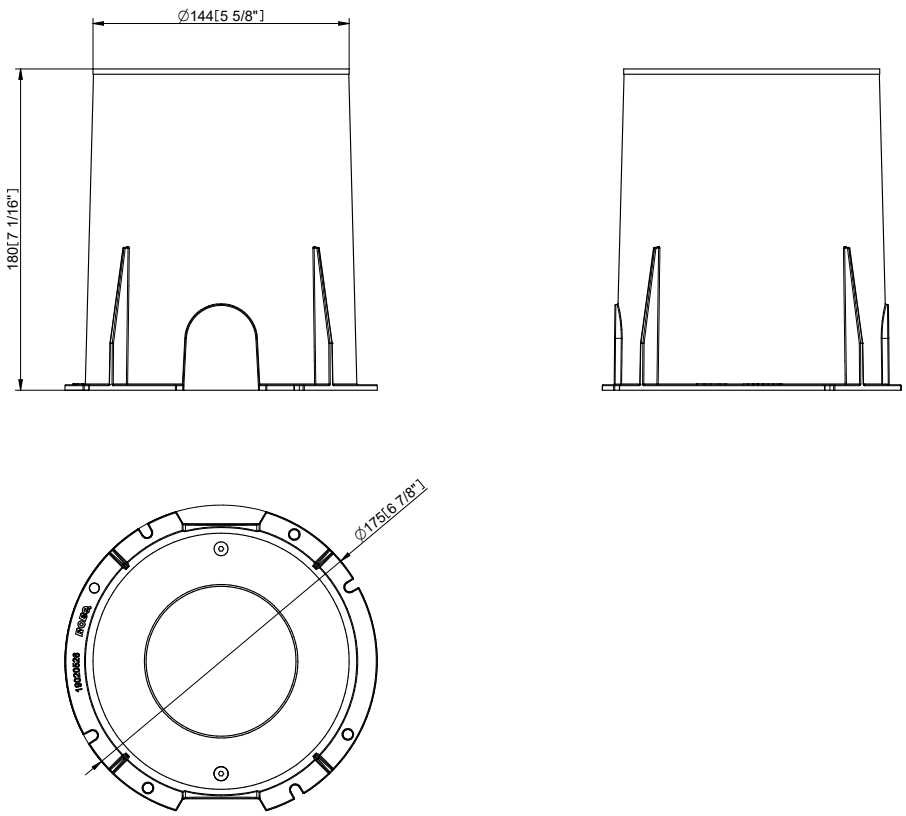

CONTROL AND CONNECTION OPTIONS

via E-BOX REMOTE

1) SJTW 5x 14AWG (1305 3336), black
2) Junction Box Remote (4x Output) + Re-enterable Electrical Insulating Resin (P/N 10980658, sold separately)
3) UL 20969 5x 20AWG (13053481), black
4) Junction Box Remote (1x Output) + Re-enterable Electrical Insulating Resin (P/N 10980658, sold separately)

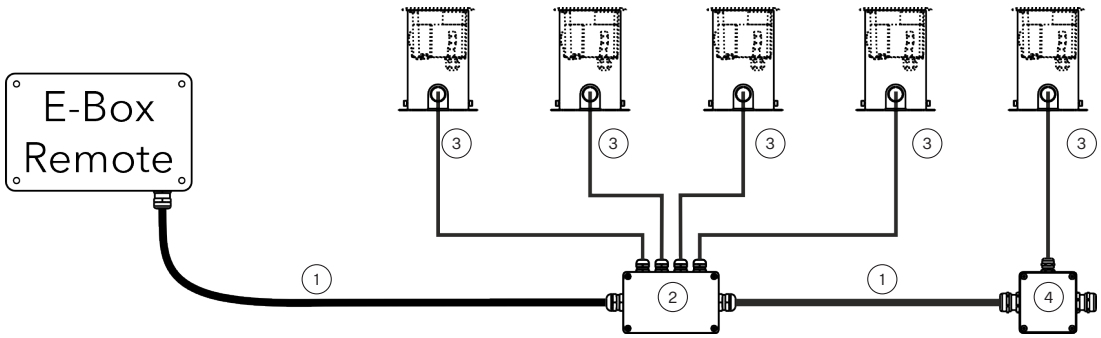

Note: All Anolis cables must be in placed in protective conduit – not suitable for direct burial.

BI-SYMMETRICAL BEAM ANGLES

Bi-symmetrical:
10°x30°,
10°x60°,
15°x45°,
30°x60°

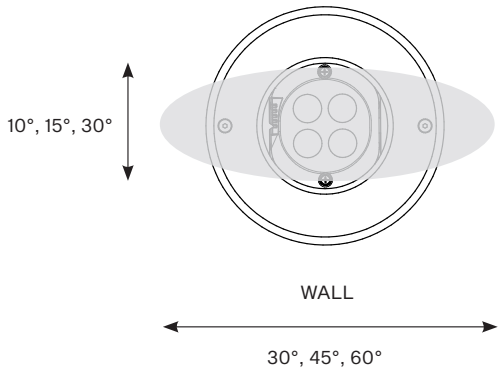
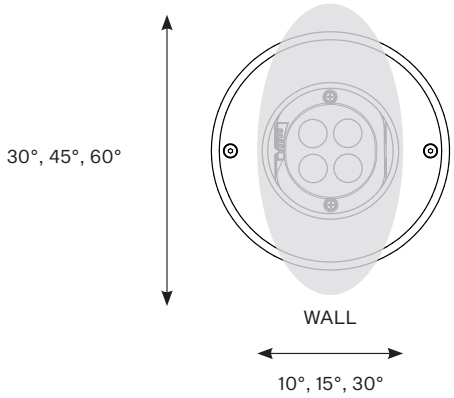
Bi-symmetrical:
30°x10°,
60°x10°,
45°x15°,
60°x30°